Innovative Technology
INTELLIGENCE IN VALIDATION

BV20

"A compact, lightweight bill acceptor"

- Compact bill acceptor
- Simple design
- Exceptional value
- Ideal for amusement, kiddie rides & jukebox applications

FEATURES

- Exceptional value
- Proven field reliability
- Quick transactions
- Easy maintenance, free firmware updates
- Simple, compact design

BENEFITS

- A bill acceptor for the same price as a coin mech
- Lowest cost of ownership
- Takes more cash
- Future proof - quick & easy updates via PC or handheld programmer
- Ideal for amusement, kiddie rides & jukebox applications

Innovative Technology
INTELLIGENCE IN VALIDATION

Technical Specification

Power
Requirements: 12V
Standby: 150mA
Running: 540mA
Peak: 1.5A

Bezel Options
66/72mm width

Protocols
SSP
ccTalk
MDB
Pulse
Parallel
Binary
Serial

Interfaces
Open collector

MCBF
100,000

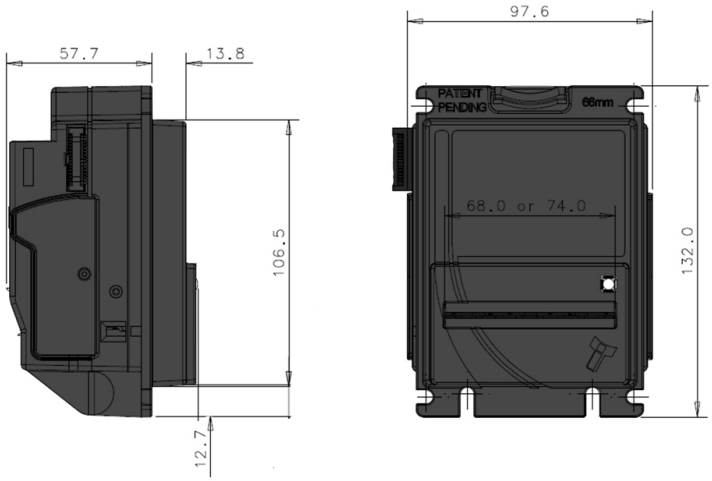

- Weight: 0.3kg

VIEW MORE
NOTE HANDLING PRODUCTS >>

Find Us
Head Office
Innovative Technology Ltd (UK)
Innovative Business Park
Derker Street
Oldham
OL1 4EQ

Telephone
+44 (0) 161 626 9999

Email
sales@innovative-technology.com